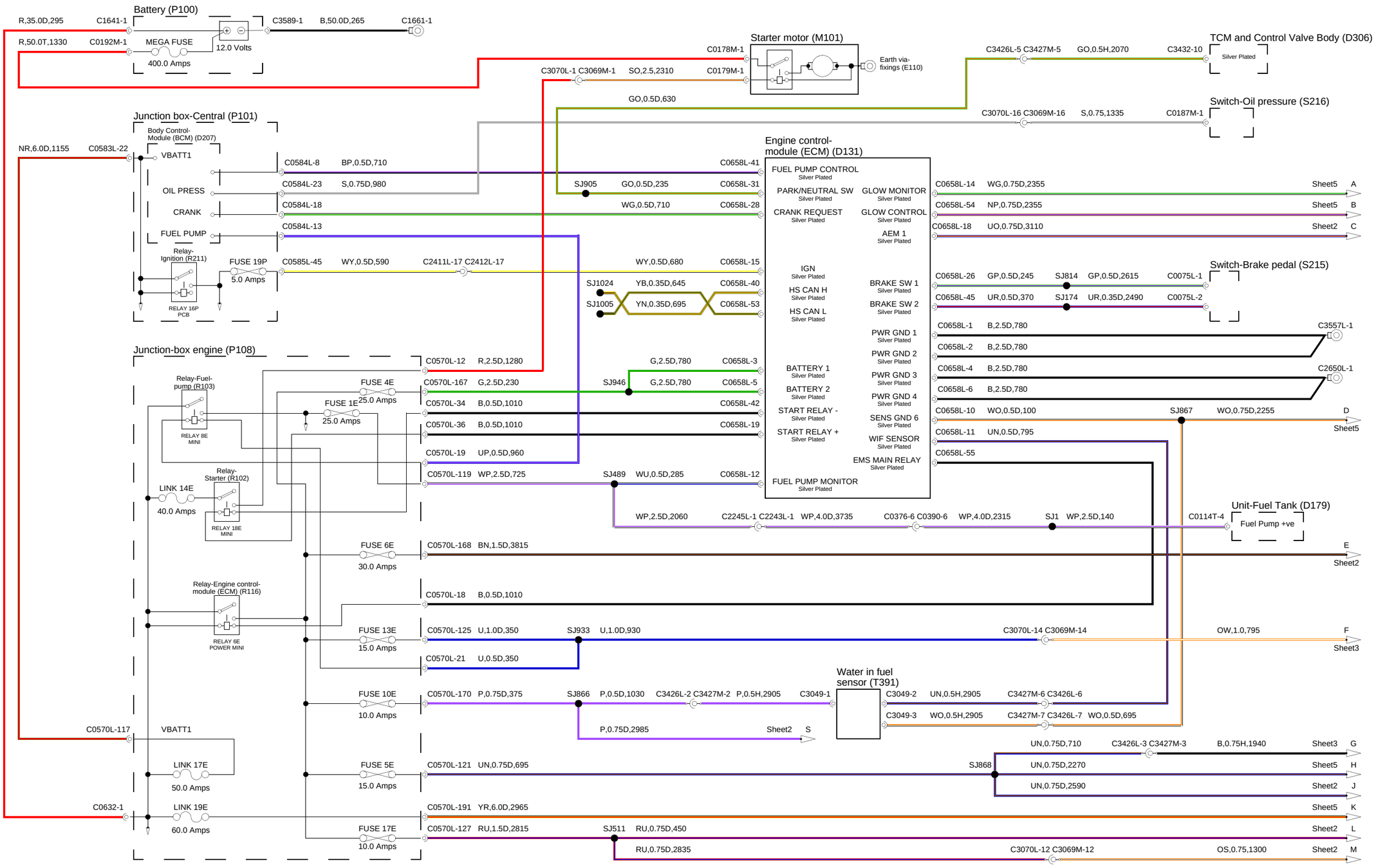
Battery (P100)
R,35.0D,295
C1641-1
C3589-1
B,50.0D,265
C1661-1
R,50.0T,1330
C0192M-1
MEGA FUSE
12.0 Volts
400.0 Amps
Starter motor (M101)
C0178M-1
Earth via-fixings (E110)
C3070L-1 C3069M-1
SO,2.5,2310
C0179M-1
GO,0.5D,630
C3426L-5 C3427M-5
GO,0.5H,2070
C3432-10
TCM and Control Valve Body (D306)
Silver Plated
Switch-Oil pressure (S216)
C3070L-16 C3069M-16
S,0.75,1335
C0187M-1
Junction box-Central (P101)
Body Control-Module (BCM) (D207)
NR,6.0D,1155
C0583L-22
VBATT1
OIL PRESS
CRANK
FUEL PUMP
C0584L-8
BP,0.5D,710
C0584L-23
S,0.75D,980
C0584L-18
C0584L-13
Relay-Ignition (R211)
FUSE 19P
5.0 Amps
RELAY 16P PCB
C0585L-45
WY,0.5D,590
C2411L-17 C2412L-17
Engine control-module (ECM) (D131)
FUEL PUMP CONTROL
PARK/NEUTRAL SW
CRANK REQUEST
GLOW MONITOR
GLOW CONTROL
AEM 1
IGN
HS CAN H
HS CAN L
BRAKE SW 1
BRAKE SW 2
BATTERY 1
BATTERY 2
START RELAY -
START RELAY +
PWR GND 1
PWR GND 2
PWR GND 3
PWR GND 4
SENS GND 6
WIF SENSOR
EMS MAIN RELAY
FUEL PUMP MONITOR
C0658L-41
C0658L-31
C0658L-28
C0658L-15
C0658L-40
C0658L-53
C0658L-3
C0658L-5
C0658L-42
C0658L-19
C0658L-12
SJ905
GO,0.5D,235
WG,0.5D,710
WY,0.5D,680
SJ1024
YB,0.35D,645
SJ1005
YN,0.35D,695
G,2.5D,780
SJ946
SJ489
WU,0.5D,285
C0658L-14
WG,0.75D,2355
Sheet5
A
C0658L-54
NP,0.75D,2355
B
C0658L-18
UO,0.75D,3110
Sheet2
C
Switch-Brake pedal (S215)
C0658L-26
GP,0.5D,245
SJ814
GP,0.5D,2615
C0075L-1
C0658L-45
UR,0.5D,370
SJ174
UR,0.35D,2490
C0075L-2
C0658L-1
B,2.5D,780
C3557L-1
C0658L-2
C0658L-4
C2650L-1
C0658L-6
C0658L-10
WO,0.5D,100
SJ867
WO,0.75D,2255
D
C0658L-11
UN,0.5D,795
C0658L-55
Junction-box engine (P108)
C0570L-12
R,2.5D,1280
Relay-Fuel-pump (R103)
FUSE 4E
25.0 Amps
C0570L-167
G,2.5D,230
FUSE 1E
25.0 Amps
C0570L-34
B,0.5D,1010
C0570L-36
B,0.5D,1010
RELAY 8E MINI
C0570L-19
UP,0.5D,960
C0570L-119
WP,2.5D,725
Relay-Starter (R102)
LINK 14E
40.0 Amps
RELAY 18E MINI
WP,2.5D,2060
C2245L-1 C2243L-1
WP,4.0D,3735
C0376-6 C0390-6
WP,4.0D,2315
SJ1
WP,2.5D,140
C0114T-4
Unit-Fuel Tank (D179)
Fuel Pump +ve
FUSE 6E
30.0 Amps
C0570L-168
BN,1.5D,3815
E
Sheet2
Relay-Engine control-module (ECM) (R116)
RELAY 6E POWER MINI
C0570L-18
B,0.5D,1010
FUSE 13E
15.0 Amps
C0570L-125
U,1.0D,350
SJ933
U,1.0D,930
C3070L-14 C3069M-14
OW,1.0,795
F
Sheet3
C0570L-21
U,0.5D,350
Water in fuel sensor (T391)
FUSE 10E
10.0 Amps
C0570L-170
P,0.75D,375
SJ866
P,0.5D,1030
C3426L-2 C3427M-2
P,0.5H,2905
C3049-1
C3049-2
UN,0.5H,2905
C3427M-6 C3426L-6
C3049-3
WO,0.5H,2905
C3427M-7 C3426L-7
WO,0.5D,695
P,0.75D,2985
Sheet2
S
C0570L-117
VBATT1
UN,0.75D,710
C3426L-3 C3427M-3
B,0.75H,1940
Sheet3
G
LINK 17E
50.0 Amps
FUSE 5E
15.0 Amps
C0570L-121
UN,0.75D,695
SJ868
UN,0.75D,2270
Sheet5
H
UN,0.75D,2590
Sheet2
J
C0632-1
LINK 19E
60.0 Amps
C0570L-191
YR,6.0D,2965
Sheet5
K
FUSE 17E
10.0 Amps
C0570L-127
RU,1.5D,2815
SJ511
RU,0.75D,450
Sheet2
L
RU,0.75D,2835
C3070L-12 C3069M-12
OS,0.75,1300
Sheet2
M

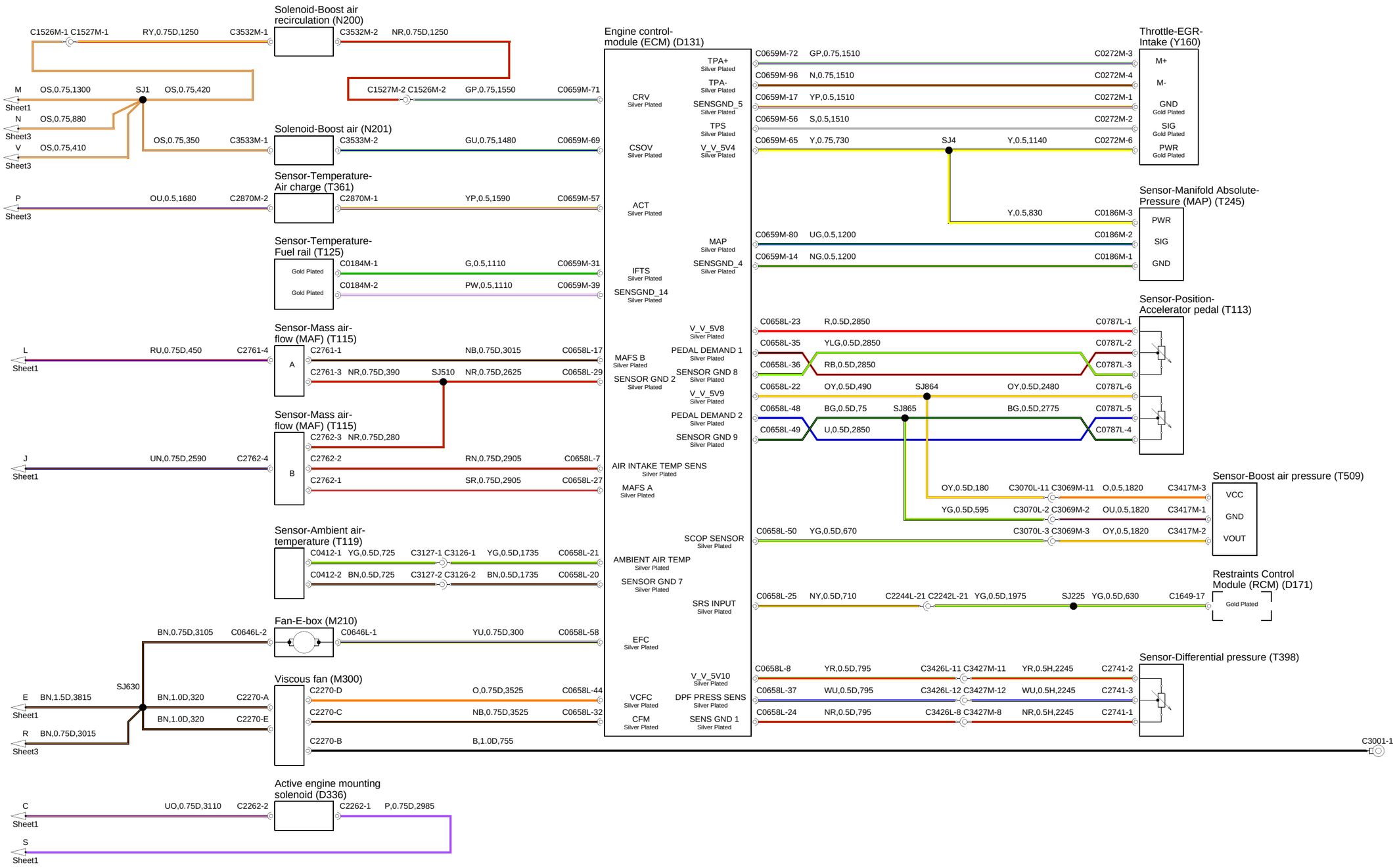
Solenoid-Boost air recirculation (N200)
C1526M-1 C1527M-1 RY,0.75D,1250 C3532M-1
C3532M-2 NR,0.75D,1250
C1527M-2 C1526M-2 GP,0.75,1550 C0659M-71
M OS,0.75,1300 SJ1 OS,0.75,420
Sheet1
N OS,0.75,880
Sheet3
V OS,0.75,410
Sheet3
OS,0.75,350 C3533M-1
Solenoid-Boost air (N201)
C3533M-2 GU,0.75,1480 C0659M-69
Sensor-Temperature-Air charge (T361)
P OU,0.5,1680 C2870M-2
Sheet3
C2870M-1 YP,0.5,1590 C0659M-57
Sensor-Temperature-Fuel rail (T125)
Gold Plated
Gold Plated
C0184M-1 G,0.5,1110 C0659M-31
C0184M-2 PW,0.5,1110 C0659M-39
Sensor-Mass air-flow (MAF) (T115)
L RU,0.75D,450 C2761-4
Sheet1
A
C2761-1 NB,0.75D,3015 C0658L-17
C2761-3 NR,0.75D,390 SJ510 NR,0.75D,2625 C0658L-29
Sensor-Mass air-flow (MAF) (T115)
J UN,0.75D,2590 C2762-4
Sheet1
B
C2762-3 NR,0.75D,280
C2762-2 RN,0.75D,2905 C0658L-7
C2762-1 SR,0.75D,2905 C0658L-27
Sensor-Ambient air-temperature (T119)
C0412-1 YG,0.5D,725 C3127-1 C3126-1 YG,0.5D,1735 C0658L-21
C0412-2 BN,0.5D,725 C3127-2 C3126-2 BN,0.5D,1735 C0658L-20
Fan-E-box (M210)
BN,0.75D,3105 C0646L-2
C0646L-1 YU,0.75D,300 C0658L-58
SJ630
E BN,1.5D,3815
Sheet1
R BN,0.75D,3015
Sheet3
BN,1.0D,320 C2270-A
BN,1.0D,320 C2270-E
Viscous fan (M300)
C2270-D O,0.75D,3525 C0658L-44
C2270-C NB,0.75D,3525 C0658L-32
C2270-B B,1.0D,755
Active engine mounting solenoid (D336)
C UO,0.75D,3110 C2262-2
Sheet1
C2262-1 P,0.75D,2985
S
Sheet1
Engine control-module (ECM) (D131)
CRV Silver Plated
TPA+ Silver Plated
TPA- Silver Plated
SENSGND_5 Silver Plated
TPS Silver Plated
CSOV Silver Plated
V_V_5V4 Silver Plated
ACT Silver Plated
MAP Silver Plated
IFTS Silver Plated
SENSGND_4 Silver Plated
SENSGND_14 Silver Plated
V_V_5V8 Silver Plated
PEDAL DEMAND 1 Silver Plated
MAFS B Silver Plated
SENSOR GND 8 Silver Plated
SENSOR GND 2 Silver Plated
V_V_5V9 Silver Plated
PEDAL DEMAND 2 Silver Plated
SENSOR GND 9 Silver Plated
AIR INTAKE TEMP SENS Silver Plated
MAFS A Silver Plated
SCOP SENSOR Silver Plated
AMBIENT AIR TEMP Silver Plated
SENSOR GND 7 Silver Plated
SRS INPUT Silver Plated
EFC Silver Plated
V_V_5V10 Silver Plated
VCFC Silver Plated
DPF PRESS SENS Silver Plated
CFM Silver Plated
SENS GND 1 Silver Plated
Throttle-EGR-Intake (Y160)
C0659M-72 GP,0.75,1510 C0272M-3 M+
C0659M-96 N,0.75,1510 C0272M-4 M-
C0659M-17 YP,0.5,1510 C0272M-1 GND Gold Plated
C0659M-56 S,0.5,1510 C0272M-2 SIG Gold Plated
C0659M-65 Y,0.75,730 SJ4 Y,0.5,1140 C0272M-6 PWR Gold Plated
Sensor-Manifold Absolute-Pressure (MAP) (T245)
Y,0.5,830 C0186M-3 PWR
C0659M-80 UG,0.5,1200 C0186M-2 SIG
C0659M-14 NG,0.5,1200 C0186M-1 GND
Sensor-Position-Accelerator pedal (T113)
C0658L-23 R,0.5D,2850 C0787L-1
C0658L-35 YLG,0.5D,2850 C0787L-2
C0658L-36 RB,0.5D,2850 C0787L-3
C0658L-22 OY,0.5D,490 SJ864 OY,0.5D,2480 C0787L-6
C0658L-48 BG,0.5D,75 SJ865 BG,0.5D,2775 C0787L-5
C0658L-49 U,0.5D,2850 C0787L-4
Sensor-Boost air pressure (T509)
OY,0.5D,180 C3070L-11 C3069M-11 O,0.5,1820 C3417M-3 VCC
YG,0.5D,595 C3070L-2 C3069M-2 OU,0.5,1820 C3417M-1 GND
C0658L-50 YG,0.5D,670 C3070L-3 C3069M-3 OY,0.5,1820 C3417M-2 VOUT
Restraints Control Module (RCM) (D171)
C0658L-25 NY,0.5D,710 C2244L-21 C2242L-21 YG,0.5D,1975 SJ225 YG,0.5D,630 C1649-17
Gold Plated
Sensor-Differential pressure (T398)
C0658L-8 YR,0.5D,795 C3426L-11 C3427M-11 YR,0.5H,2245 C2741-2
C0658L-37 WU,0.5D,795 C3426L-12 C3427M-12 WU,0.5H,2245 C2741-3
C0658L-24 NR,0.5D,795 C3426L-8 C3427M-8 NR,0.5H,2245 C2741-1
C3001-1

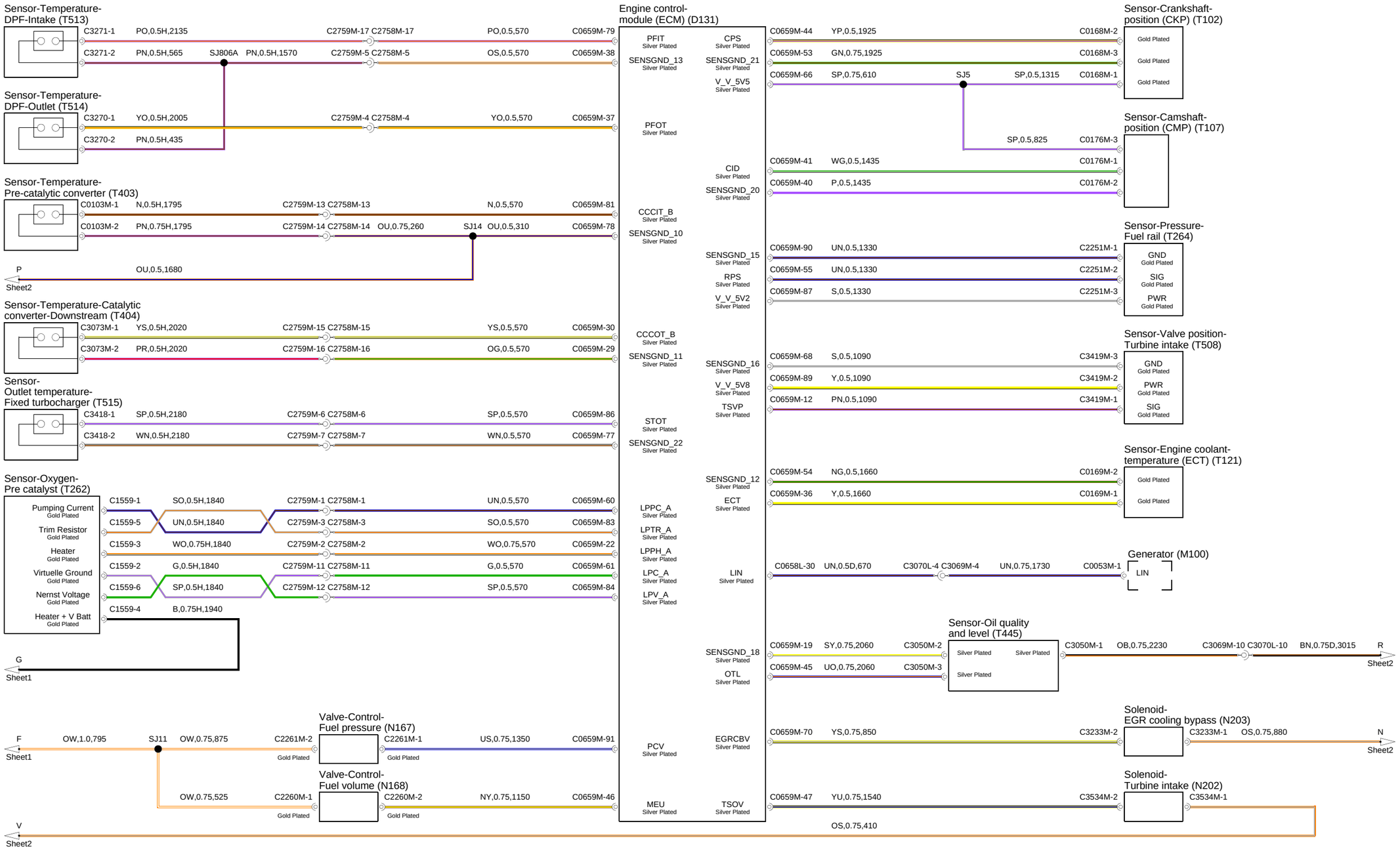
Sensor-Temperature-DPF-Intake (T513)
C3271-1 PO,0.5H,2135 C2759M-17 C2758M-17 PO,0.5,570 C0659M-79
C3271-2 PN,0.5H,565 SJ806A PN,0.5H,1570 C2759M-5 C2758M-5 OS,0.5,570 C0659M-38
Sensor-Temperature-DPF-Outlet (T514)
C3270-1 YO,0.5H,2005 C2759M-4 C2758M-4 YO,0.5,570 C0659M-37
C3270-2 PN,0.5H,435
Sensor-Temperature-Pre-catalytic converter (T403)
C0103M-1 N,0.5H,1795 C2759M-13 C2758M-13 N,0.5,570 C0659M-81
C0103M-2 PN,0.75H,1795 C2759M-14 C2758M-14 OU,0.75,260 SJ14 OU,0.5,310 C0659M-78
P OU,0.5,1680
Sheet2
Sensor-Temperature-Catalytic converter-Downstream (T404)
C3073M-1 YS,0.5H,2020 C2759M-15 C2758M-15 YS,0.5,570 C0659M-30
C3073M-2 PR,0.5H,2020 C2759M-16 C2758M-16 OG,0.5,570 C0659M-29
Sensor-Outlet temperature-Fixed turbocharger (T515)
C3418-1 SP,0.5H,2180 C2759M-6 C2758M-6 SP,0.5,570 C0659M-86
C3418-2 WN,0.5H,2180 C2759M-7 C2758M-7 WN,0.5,570 C0659M-77
Sensor-Oxygen-Pre catalyst (T262)
Pumping Current Gold Plated
Trim Resistor Gold Plated
Heater Gold Plated
Virtuelle Ground Gold Plated
Nernst Voltage Gold Plated
Heater + V Batt Gold Plated
C1559-1 SO,0.5H,1840 C2759M-1 C2758M-1 UN,0.5,570 C0659M-60
C1559-5 UN,0.5H,1840 C2759M-3 C2758M-3 SO,0.5,570 C0659M-83
C1559-3 WO,0.75H,1840 C2759M-2 C2758M-2 WO,0.75,570 C0659M-22
C1559-2 G,0.5H,1840 C2759M-11 C2758M-11 G,0.5,570 C0659M-61
C1559-6 SP,0.5H,1840 C2759M-12 C2758M-12 SP,0.5,570 C0659M-84
C1559-4 B,0.75H,1940
G
Sheet1
Valve-Control-Fuel pressure (N167)
F OW,1.0,795 SJ11 OW,0.75,875 C2261M-2 Gold Plated C2261M-1 Gold Plated US,0.75,1350 C0659M-91
Sheet1
Valve-Control-Fuel volume (N168)
OW,0.75,525 C2260M-1 Gold Plated C2260M-2 Gold Plated NY,0.75,1150 C0659M-46
V
Sheet2
Engine control-module (ECM) (D131)
PFIT Silver Plated
SENSGND_13 Silver Plated
PFOT Silver Plated
CCCIT_B Silver Plated
SENSGND_10 Silver Plated
CCCOT_B Silver Plated
SENSGND_11 Silver Plated
STOT Silver Plated
SENSGND_22 Silver Plated
LPPC_A Silver Plated
LPTR_A Silver Plated
LPPH_A Silver Plated
LPC_A Silver Plated
LPV_A Silver Plated
PCV Silver Plated
MEU Silver Plated
CPS Silver Plated
SENSGND_21 Silver Plated
V_V_5V5 Silver Plated
CID Silver Plated
SENSGND_20 Silver Plated
SENSGND_15 Silver Plated
RPS Silver Plated
V_V_5V2 Silver Plated
SENSGND_16 Silver Plated
V_V_5V8 Silver Plated
TSVP Silver Plated
SENSGND_12 Silver Plated
ECT Silver Plated
LIN Silver Plated
SENSGND_18 Silver Plated
OTL Silver Plated
EGRCBV Silver Plated
TSOV Silver Plated
Sensor-Crankshaft-position (CKP) (T102)
C0659M-44 YP,0.5,1925 C0168M-2 Gold Plated
C0659M-53 GN,0.75,1925 C0168M-3 Gold Plated
C0659M-66 SP,0.75,610 SJ5 SP,0.5,1315 C0168M-1 Gold Plated
Sensor-Camshaft-position (CMP) (T107)
SP,0.5,825 C0176M-3
C0659M-41 WG,0.5,1435 C0176M-1
C0659M-40 P,0.5,1435 C0176M-2
Sensor-Pressure-Fuel rail (T264)
C0659M-90 UN,0.5,1330 C2251M-1 GND Gold Plated
C0659M-55 UN,0.5,1330 C2251M-2 SIG Gold Plated
C0659M-87 S,0.5,1330 C2251M-3 PWR Gold Plated
Sensor-Valve position-Turbine intake (T508)
C0659M-68 S,0.5,1090 C3419M-3 GND Gold Plated
C0659M-89 Y,0.5,1090 C3419M-2 PWR Gold Plated
C0659M-12 PN,0.5,1090 C3419M-1 SIG Gold Plated
Sensor-Engine coolant-temperature (ECT) (T121)
C0659M-54 NG,0.5,1660 C0169M-2 Gold Plated
C0659M-36 Y,0.5,1660 C0169M-1 Gold Plated
Generator (M100)
C0658L-30 UN,0.5D,670 C3070L-4 C3069M-4 UN,0.75,1730 C0053M-1 LIN
Sensor-Oil quality and level (T445)
C0659M-19 SY,0.75,2060 C3050M-2 Silver Plated Silver Plated C3050M-1 OB,0.75,2230 C3069M-10 C3070L-10 BN,0.75D,3015 R
Sheet2
C0659M-45 UO,0.75,2060 C3050M-3 Silver Plated
Solenoid-EGR cooling bypass (N203)
C0659M-70 YS,0.75,850 C3233M-2 C3233M-1 OS,0.75,880 N
Sheet2
Solenoid-Turbine intake (N202)
C0659M-47 YU,0.75,1540 C3534M-2 C3534M-1
OS,0.75,410

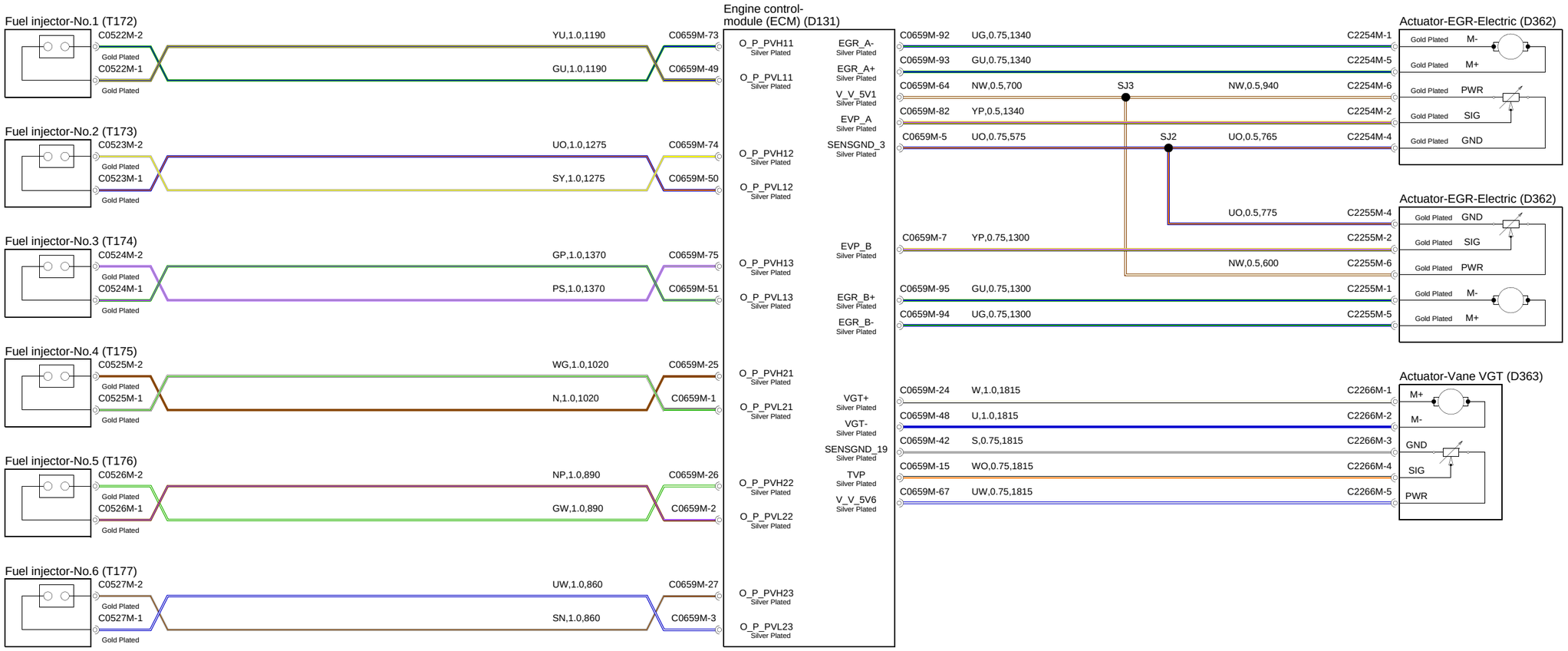
Fuel injector-No.1 (T172)
C0522M-2
Gold Plated
C0522M-1
Gold Plated
YU,1.0,1190
GU,1.0,1190
C0659M-73
C0659M-49
Fuel injector-No.2 (T173)
C0523M-2
Gold Plated
C0523M-1
Gold Plated
UO,1.0,1275
SY,1.0,1275
C0659M-74
C0659M-50
Fuel injector-No.3 (T174)
C0524M-2
Gold Plated
C0524M-1
Gold Plated
GP,1.0,1370
PS,1.0,1370
C0659M-75
C0659M-51
Fuel injector-No.4 (T175)
C0525M-2
Gold Plated
C0525M-1
Gold Plated
WG,1.0,1020
N,1.0,1020
C0659M-25
C0659M-1
Fuel injector-No.5 (T176)
C0526M-2
Gold Plated
C0526M-1
Gold Plated
NP,1.0,890
GW,1.0,890
C0659M-26
C0659M-2
Fuel injector-No.6 (T177)
C0527M-2
Gold Plated
C0527M-1
Gold Plated
UW,1.0,860
SN,1.0,860
C0659M-27
C0659M-3
Engine control-module (ECM) (D131)
O_P_PVH11 Silver Plated
O_P_PVL11 Silver Plated
O_P_PVH12 Silver Plated
O_P_PVL12 Silver Plated
O_P_PVH13 Silver Plated
O_P_PVL13 Silver Plated
O_P_PVH21 Silver Plated
O_P_PVL21 Silver Plated
O_P_PVH22 Silver Plated
O_P_PVL22 Silver Plated
O_P_PVH23 Silver Plated
O_P_PVL23 Silver Plated
EGR_A- Silver Plated
EGR_A+ Silver Plated
V_V_5V1 Silver Plated
EVP_A Silver Plated
SENSGND_3 Silver Plated
EVP_B Silver Plated
EGR_B+ Silver Plated
EGR_B- Silver Plated
VGT+ Silver Plated
VGT- Silver Plated
SENSGND_19 Silver Plated
TVP Silver Plated
V_V_5V6 Silver Plated
C0659M-92 UG,0.75,1340 C2254M-1
C0659M-93 GU,0.75,1340 C2254M-5
C0659M-64 NW,0.5,700 SJ3 NW,0.5,940 C2254M-6
C0659M-82 YP,0.5,1340 C2254M-2
C0659M-5 UO,0.75,575 SJ2 UO,0.5,765 C2254M-4
Actuator-EGR-Electric (D362)
Gold Plated M-
Gold Plated M+
Gold Plated PWR
Gold Plated SIG
Gold Plated GND
UO,0.5,775 C2255M-4
C0659M-7 YP,0.75,1300 C2255M-2
NW,0.5,600 C2255M-6
C0659M-95 GU,0.75,1300 C2255M-1
C0659M-94 UG,0.75,1300 C2255M-5
Actuator-EGR-Electric (D362)
Gold Plated GND
Gold Plated SIG
Gold Plated PWR
Gold Plated M-
Gold Plated M+
C0659M-24 W,1.0,1815 C2266M-1
C0659M-48 U,1.0,1815 C2266M-2
C0659M-42 S,0.75,1815 C2266M-3
C0659M-15 WO,0.75,1815 C2266M-4
C0659M-67 UW,0.75,1815 C2266M-5
Actuator-Vane VGT (D363)
M+
M-
GND
SIG
PWR

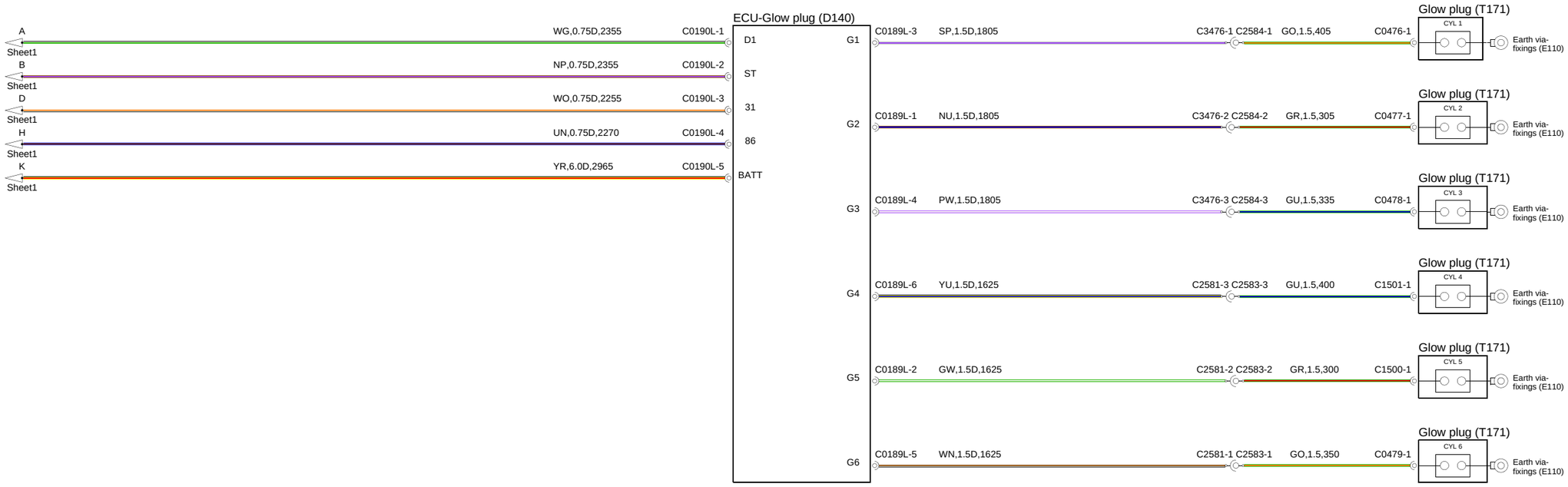
ECU-Glow plug (D140)
A
Sheet1
WG,0.75D,2355
C0190L-1
D1
B
Sheet1
NP,0.75D,2355
C0190L-2
ST
D
Sheet1
WO,0.75D,2255
C0190L-3
31
H
Sheet1
UN,0.75D,2270
C0190L-4
86
K
Sheet1
YR,6.0D,2965
C0190L-5
BATT
G1
C0189L-3
SP,1.5D,1805
C3476-1 C2584-1
GO,1.5,405
C0476-1
Glow plug (T171)
CYL 1
Earth via-fixings (E110)
G2
C0189L-1
NU,1.5D,1805
C3476-2 C2584-2
GR,1.5,305
C0477-1
Glow plug (T171)
CYL 2
Earth via-fixings (E110)
G3
C0189L-4
PW,1.5D,1805
C3476-3 C2584-3
GU,1.5,335
C0478-1
Glow plug (T171)
CYL 3
Earth via-fixings (E110)
G4
C0189L-6
YU,1.5D,1625
C2581-3 C2583-3
GU,1.5,400
C1501-1
Glow plug (T171)
CYL 4
Earth via-fixings (E110)
G5
C0189L-2
GW,1.5D,1625
C2581-2 C2583-2
GR,1.5,300
C1500-1
Glow plug (T171)
CYL 5
Earth via-fixings (E110)
G6
C0189L-5
WN,1.5D,1625
C2581-1 C2583-1
GO,1.5,350
C0479-1
Glow plug (T171)
CYL 6
Earth via-fixings (E110)